QUICK REFERENCE WIRING GUIDE

DenIKS2 Isolation Key Switch

Generic intruder-panel wiring - Density Line range (C-Plus control board)



01. Overview for Density Line & HP Range

The LED indication double pole isolation key switch has been primarily designed to avoid false fog activation when the engineer is working on the intruder panel as part of the requirements for the EN Fogging standards.
It has been designed to be compatible with the complete Density Line and Basic, Lite range of fog machines that use the C-Plus and Compact control boards. Intelligent functions and features have also been designed to simplify installation and to enhance its capabilities.

Key isolation enables the option to initiate a 4 second fog test shot without the need to reprogram the Fog machine. Selectable EOL resistors for key / cover tamper status and onboard output relays make this isolation key switch a simple wiring interface between the intruder panel and the fog machine.
This guide only focuses on the interconnectivity between Density Line & HP Range (C-Plus Control board) and a typical professional intruder panel. Refer to the complete manual for full operational functions and features that also include Density Basic & LITE range.

Key intelligent features for the Density Line range of machines

- **Maintenance** – Ability to provide an innovative 4 second test shoot for the complete Density range without the need to remove the machine front cover and reprogram the fire time on the control board. (Timeout failsafe built-in)
- **Relays** – Onboard output relays for Arm / Trigger / PA / TRG2 that can be easily connected to any intruder panels PGM outputs.
- **TR2 Input** (C-plus control board) - Links out or mimics the customisable input.
- **Monitored key status** – Dedicated switch status terminals with a broad range of selectable NC/ alarm / tamper EOL Resistors to suit all major intruder brands.
- **Hold Up Alarm** – (HUA) - “Panic” output as an independent isolatable option.
- **All Jumpers** can be fitted and removed while the unit is running (take anti-static precautions) and the new function will be picked up immediately.

02. Introduction

The IKS2 key switch is supplied with all jumpers configured to their factory-default settings. This configuration is generally suitable for most Density Line and HP installations.

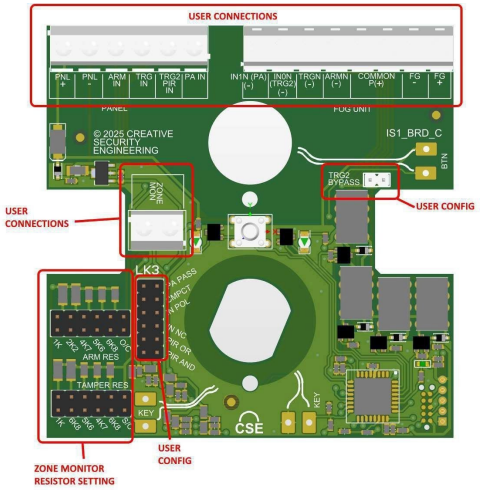

03. Polarity & Logic Specification

IMPORTANT – The 12VDC Supply voltage to the Key Switch MUST be from the both the Intruder panel and the Density Fog machine.

NOTE – As output relays are inbuilt any PGM outputs (Neg applied) can be used to drive the DenIKS2 inputs.

As an example, Honeywell Galaxy - Option 53 – Program Outputs - OUTPUT POLARITY - You would select 0 = POS (- 12V going to 0V in activation). In this brand of panel, you are selecting POS, but it basically means neg applied to Arm/ Trigger.

Jumper	Task
IN POL (RED JUMPER)	This link defines the polarity of the trigger signal from the intruder panel.
	Jumper fitted = inputs respond to make / break to positive rail. Also known as positive apply/remove.
	Jumper absent = inputs respond to make / break to negative rail. Also known as negative apply/remove (Default setting)
	LEAVE ABSENT (OPEN) AS PER DEFAULT SETTING!

Jumper	Task
IN NC (YELLO JUMPER)	This link defines the default state of the Intruder panels output logic condition.
	Jumper absent = Normally Open input (panel contact open in its resting state). Input active is signalled by completing the circuit by applying a positive or negative signal as configured by IN POL.
	Jumper Fitted = Normally Closed input (panel contact closed in its resting state). Input active is signalled by breaking the circuit by removing a positive or negative signal as configured by IN POL.
	LEAVE ABSENT (OPEN) AS PER DEFAULT SETTING!

04. Connecting the DenIKS2 board to the Intruder Panel

The Den IKS2 PCB requires a12V nominal power supply from the alarm panel **and** Fog Machine as the “Panel” and “Fog unit” terminals are electrically isolated from each eliminating ground issues between system components.

Example shown of a negative applied (Logic) input wiring from any professional intruder panel.

Intruder 12v Power connected to (PNL + -)

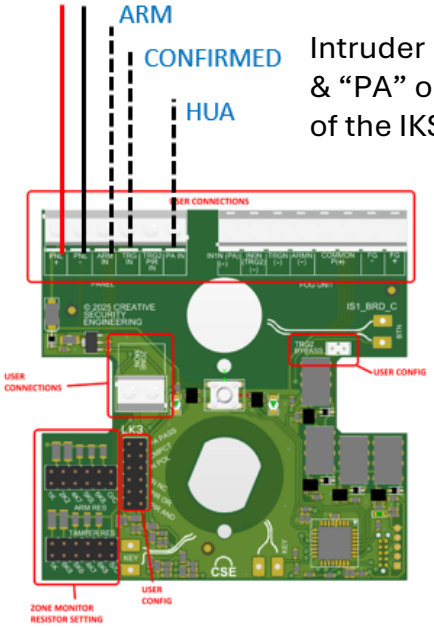

Intruder PGM Outputs – Neg applied “ARM” & “CONFIRMED” & “PA” output connected to the respective “Panel in” inputs of the IKS2 Key Switch.

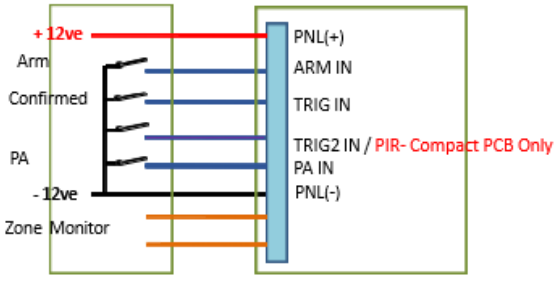

Trigger outputs Neg applied

05. Switch Status – Zone Monitoring

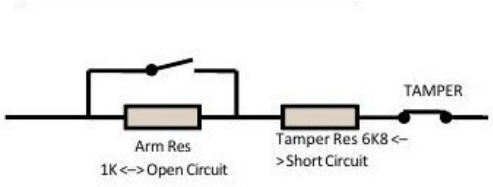

Zone Description – Fog Isolation

Zone Attribute – Intruder

Select the EOL resistor values to suit Intruder brand.

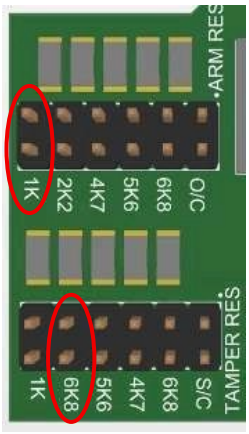

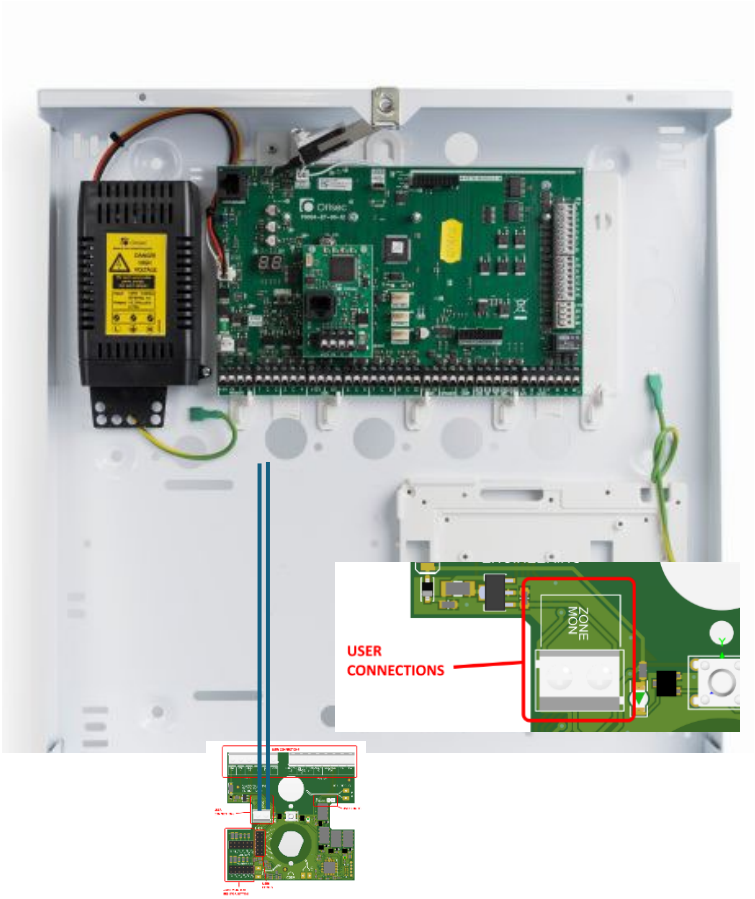

06. HUA / PA Pass

For high-risk sites the HUA (PA) can still be activated and deploy fog even if the system is isolated.

Jumper	Task
PA PASS (Black)	Jumper fitted - A PA input results in a PA output even if the key switch is set to isolated
	Jumper absent – PA is Isolated (Default)

07. Connecting the DEN IKS2 to the Fog Machine

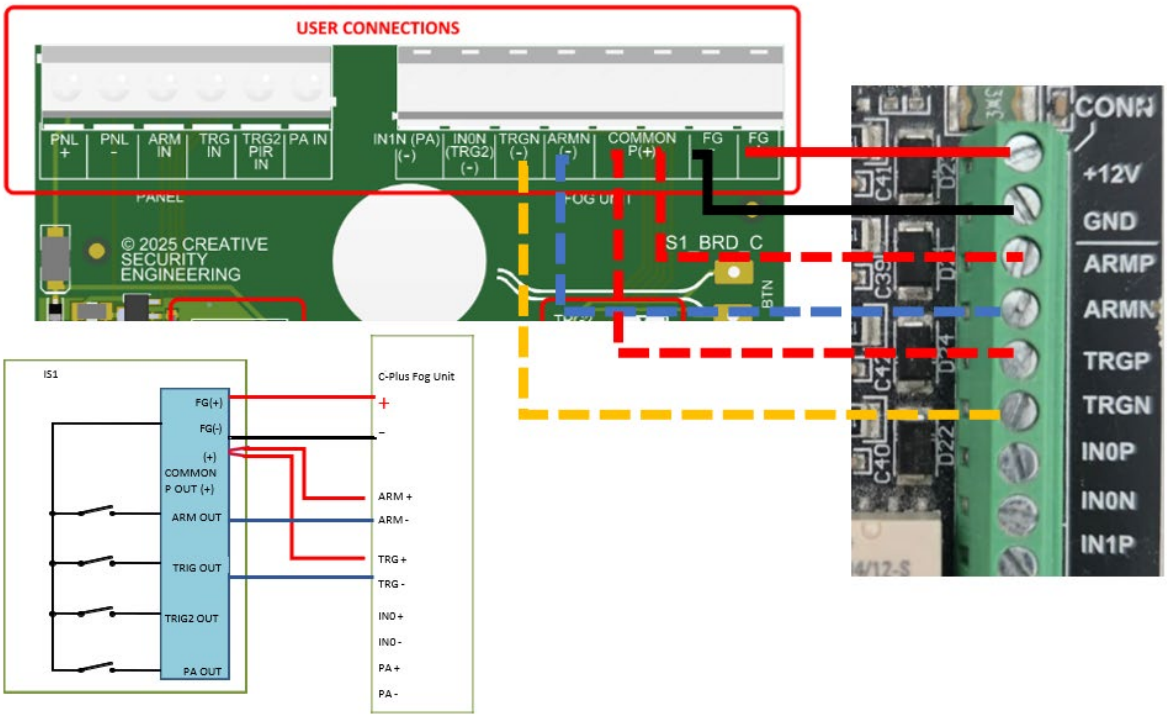

- The C- Plus Fog Control board +12V & GND out is connected to IKS2 (FG+-) terminal.

- The C-Plus Fog Control board Neg inputs are connected to suit the intruder panels outputs connected to the IKS2 Panel “in” terminal. In this example “Arm” and “TRG” (Confirmed) are connected to the C-Plus Control board.

- Note: The Common P + terminals on the IKS2 can be used to provide the permanent +VE supply for the ARMP, TRGP, IN0P and IN1P inputs instead of linking down from the +12VE out terminal.

08. IN0P & IN0N - TRG2 Bypass Jumper

The Density 900,1500 & 2400 (Metal cabinet model) requires a permanent 12V supply being applied to IN0P and IN0N if the input is not being connected to a fire alarm / control panel. If this is not applied, then the Fog machine **will not** shoot.

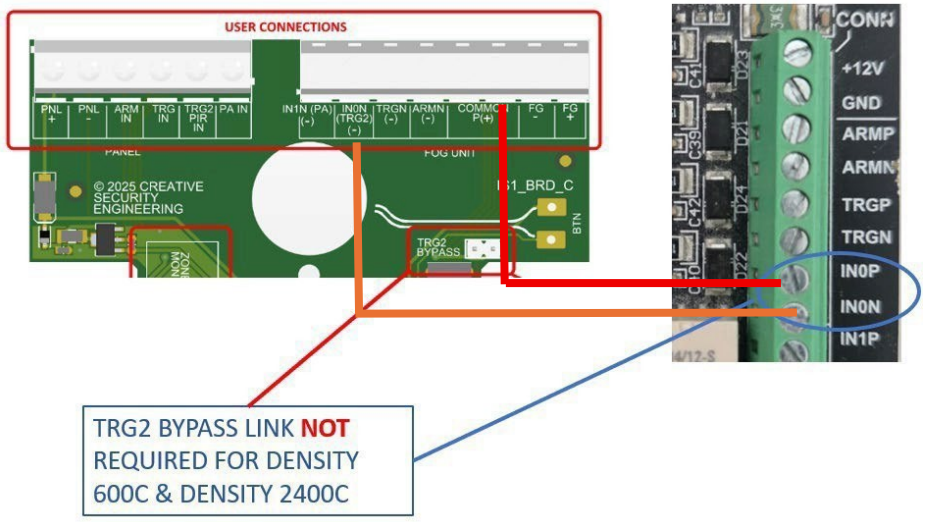

Jumper	Task
TRG2 Bypass (Blue Jumper)	Jumper fitted – Provides permanent 12V to TRG2 -ONLY USE FOR DENSITY 900,1500,2400 – Metal cabinet type.
	Jumper absent default – TRG2 output relay will open / close according to TRG2 IN conditions. **Keep as default** for Density 600C, 900C,2400C – Plastic cabinet type.

09. LED Status and Test Fire Function

When the system is isolated the test button can be used to initiate a test fire. There are rules to prevent misuse of the button. If a test shot is permitted, the red flash is short. If a test fire is not permitted, the red flash is long.
A test fire is permitted unless a button sequence has failed, a test sequence has already successfully completed or the window for initiating a test is over.
While the button is being pressed, the green LED flashes 1/sec to aid counting.

Button rules are as follows:

- A test fire must be initiated within 5 minutes of isolating the key switch.
- Button press sequence must be completed within 5.5 seconds of starting otherwise the sequence fails.
- For a 4 second test fire, the button must be held for 3.5 seconds. Too short or too long causes the sequence to fail.



Green LED- On Solid – **Non-Isolated**

Green LED – Flashing – **System Armed**

Green LED – On Solid with Red LED Flashing – **Fog System Isolated**

4 – Second Test Shot – Annual maintenance requires a minimum of 4 seconds.

Isolate Fog Machine - Green LED- On Solid - Red LED – Flashing

Within 5 minutes press and hold down the “Test” button. As you press the green LED will begin to flash. Count the number of flashes to 4 and then release the button.

If timing is successful, the Green LED will flash rapidly whilst “arming” and “triggering” the fog machine to shoot for 4 seconds.

Any subsequent attempts or if timeout period has been exceeded then reset the key.

1- Second Test Shot – In circumstances where 4 seconds may produce too much fog e.g. at a live site then there is a provision to shoot for 1 second. **This should not be used as part of an annual maintenance test.**

For a 1 second test shot, the button must be pressed twice after the switch is isolated. Presses must be “deliberate”, not quick dabs. Long presses, long pauses or additional presses cause the sequence to fail.

NOTE: there is a 2 second pause after the second button release before the sequence is acknowledged. If the sequence fails, the system goes into non-permitted mode. Simply reset and retry.

10. Functional Behaviour

Non-Isolated
When the key position is set to non-isolate, Arm, TRIG, TRG2, PA are passed through. When the “Arm” signal is active, the green LED flashes at a 1 second interval with a short flash.

Isolated
When the key position is set to isolated, Arm, TRIG, TRG2 signals are blocked and the outputs are set to open circuit. PA is also blocked if its jumper setting is set to open its default position. When the system is isolated, the red LED flashes at a 1 second interval or 2 second interval depending on whether a test shot is permitted or not.

11. LED Interpretation

When un-isolated	Interpretation
Solid Green, Red Off	Not Armed
Green @1 Sec flash, Red Off	Armed

When isolated	Interpretation
Solid green / Red @ 1 sec flash	Waiting for button press
Red @ 2 sec flash, Green off	Button press no longer possible because of failed attempt - Completed successful attempt - Waited too long to try.
Green @ 0.5 sec fast flash, Red off	2 second or 4 second fire sequence in progress

12. Default Jumper Settings

Jumper	Default Setting
PA PASS – (White Jumper)	Jumper Off – HUA / PA will be isolated along with Arm input when switch isolated
CMPCT – (Green Jumper)	Jumper Off – IKS2 set to work with Density Line (C-Plus Control board)
IN POL – (Red Jumper)	Jumper Off – Input negative applied for Arm, TRG, TRG2 and PA inputs.
IN NC – (Yellow Jumper)	Jumper Off – Normally open logic sate
TRG2 Bypass	Jumper Off – Follows TRG2 Input

13. Intruder System Output Polarity and Logic Jumper Setting

The default configuration—negative-applied inputs with normally open (NO) logic—is recommended. However, the IKS2 supports alternative input polarity and logic configurations to accommodate different system requirements.

Panel Output Logic	Jumper Setting
For alarm panels with negative apply, normally open contacts	Use default setting
For alarm panels with negative apply, normally closed contacts	Fit jumper 'IN NC' do not fit jumper 'IN POL'
For alarm panels with positive apply, normally open contacts	Fit jumper 'IN POL' fit jumper 'IN NC'
For alarm panels with positive apply, normally closed contacts	Fit jumper 'IN POL' do not fit jumper 'IN NC'
To allow PA (panic) function to pass through when isolated	Fit 'PA Pass' Jumper

14. Density Range – Control Board Type

Density Model	Density Control Board Type	Jumper
Basic & Lite	Compact	CMPCT
Density Line & HP	C- Plus	Default - DO NOT SELECT -

15. Density Range – TRG2 Bypass Link Settings

Density Model	Cabinet Type	Control Board Type	TRG2 Bypass Jumper
Basic & Lite	Plastic	Compact	NA
Density 900	Metal	C-Plus	Fit if input is not being used
Density 1500	Metal	C-Plus	Fit if input is not being used
Density 2400	Metal	C-Plus	Fit if input is not being used
Density 600C	Plastic	C-Plus	Do not fit jumper
Density 900C	Plastic	C-Plus	Do not fit jumper
Density 1500C	Plastic	C-Plus	Do not fit jumper
Density 2400C	Plastic	C-Plus	Do not fit jumper

ENGINEER SUPPORT
Density Security Fog Solutions | Dnetuk Ltd
Tel: 0330 133 8990 | sales@densitysecurityfog.co.uk
www.densitysecurityfog.co.uk
Marble Hall, 80 Nightingale Road, Derby DE24 8BF, UK