Density
Integration Instructions



www.orisec.co.uk

This guide outlines the setup and programming required for integrating a Density Fog Machine with an Orisec control panel.

Please note, this guide does not cover how to setup and install the Orisec Control Panel or Density Fog Machine. Please refer to the relevant installation manual for assistance with basic installation of the required Panel/ Machine.

The Density integration provides the following features:

- Arm/ Disarm (Remote or Local)
- Full Trigger – based on programmed shoot time (Remote or Local)
- Test Shoot (10 Seconds or 20 Seconds – Density Machine Dependent) (Remote or Local)
- Service Shoot (4 Seconds or 2 Seconds – Density Machine Dependent) (Remote or Local)
- Reset tank level (Remote or Local)
- View Unit Temperature (Density 600, 900, 1500, 2400 only)
- View Tamper Status (Remote or Local)
- View Battery Status (Remote or Local)
- View Mains Status (Remote or Local)
- View 'Ready' Status (Remote or Local)
- View Density unit information i.e. Density Fog 900 (Remote or Local)
- Create custom Chains and scenarios for Arming (Remote or Local)
- Create custom Chains and scenarios for Triggering (Remote or Local)

The above information can be viewed on any Orisec keypad, ControlPlus 2 Application and Orisec UDL.

The following is required to create the integration:

- Density Fog Machine (Supported models listed below)
- Orisec Control Panel (Supported control panels and versions listed below)
- Density Integration Cable (Orisec Part code: Density RS-232 LEAD)

  OR
- Wireless Density integration module (Part code: W-Density)

Optional software programming tools and controls

- Orisec UDL – Version 6.0.4.9, onwards
- ControlPlus2 – Version 1.8.0 onwards
- Engineers App – Version 1.0 onwards

The following Density units are fully compatible with the Orisec range of control panels:



Density UNIK

The Density UNIK has been designed to protect small spaces up to 10,500 cubic feet. This unit operates from a battery, making it the perfect solution for smaller areas and even domestic locations. In 20 seconds, the Density UNIK will produce more than 3,500 cubic feet of a dense fog that creates a zero-visibility environment.



Density Basic

The Density Basic has been developed to protect small domestic size areas such as car garages, panic rooms and high value goods areas up to 390 m^3.



Density 600

The Density 600 has been developed to protect medium size areas such as Post Offices and high value goods areas up to 600 m^3.



Density 900

The Density 900 has been developed to protect medium size areas such as newsagents and high value goods areas up to 900 m^3.



Density 2400

The Density 2400 is the most powerful model of the range. It is designed for premises such as large warehouses with high ceilings up to 2400 m^3.

The supported Orisec control panels and software versions are listed below:

Control Panel	Software Version	Supported Comport
CP-20/CP-60	Version 6.00, onwards	Comport 1
CK-20/CK-60	Version 6.00 onwards	Comport 1
ZP-10/ZP-20/ZP-40/ZP-100	Version 6.00, onwards	Comport 1
CP-50/CP-100/CP-200	Version 9.03, onwards	Comport 1 or 2
W-CP-40 K/T/E	Version 6.00, onwards	Comport 1

1. Installation – RS-232 Cable

Utilising the 'Density Integration Cable – Density RS-232 LEAD' make a connection from the Density Fog Machine to the Orisec control panel as illustrated below, please note this is a straight through connection (RX-RX and TX-TX).

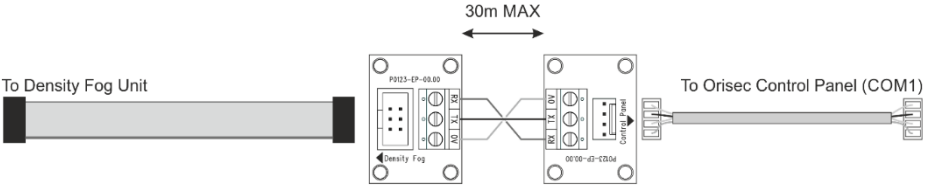

Orisec Control Panel Connection

Connect the 4-way Molex plug onto Comport 1 of the control panel as highlighted below:

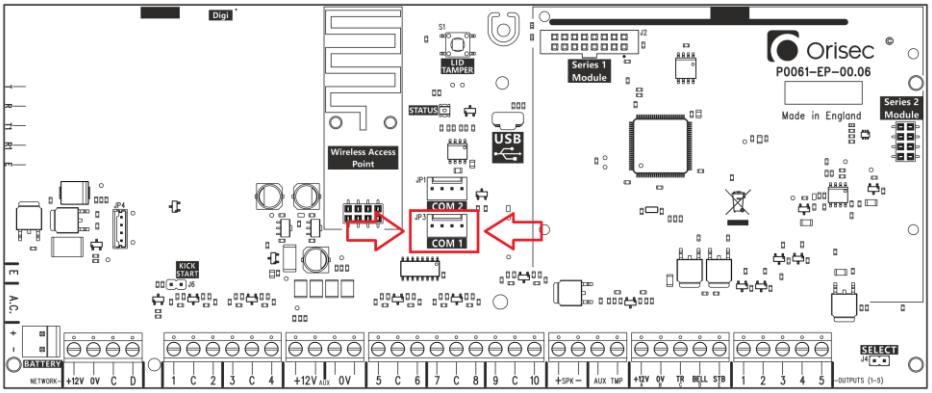

Density UNIK

Connect the Density RS232 Connection lead onto 'J4' of the Density UNIK machine as highlighted below.
Ensure W3 on the Density UNIK is FITTED.

This mode of operation is only supported when the Density UNIK is in "Always On" mode.

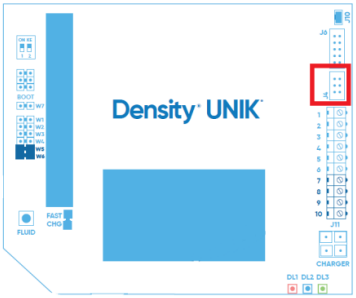

Density 600

Connect the Density RS232 Connection lead onto 'COM1' of the Density 600 machine as highlighted below.

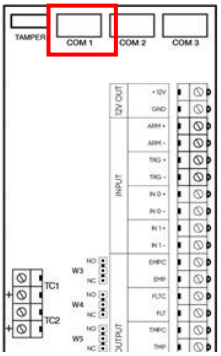

Dipswitch 6 - Default is OFF, this needs to be left OFF.
IMPORTANT: When changing position on the dipswitch, the Density unit MUST be rebooted. It is suggested to turn OFF the power, wait 20 seconds, then reapply power.
Dipswitch 8 - Service Mode - Default is off.
IMPORTANT: Changing the dipswitch position for service mode does not require a machine reboot.

Density 900 / Density 1500/ Density 2400

Connect the Density RS232 Connection lead onto 'COM3' of the Density 900/ Density 1500/ Density 2400 machine as highlighted below.

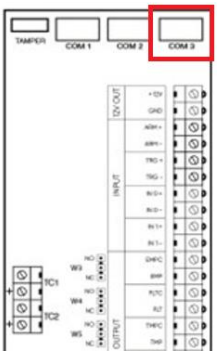

Dipswitch 6 - Default is On, this needs to be turned Off.

IMPORTANT: When changing position on the dipswitch, the Density unit MUST be rebooted. It is suggested to turn OFF the power, wait 20 seconds, then reapply power.

Dipswitch 8 - Service Mode - Default is ON, this needs to be turned OFF.

IMPORTANT: Changing the dipswitch position for service mode does not require a machine reboot.

Com Port Setup

Using any of the Density Machines via the RS-232 interface the control panels Comport must be programmed as 'Density Fog/ UNIK'.

On the Orisec control panel navigate to 'Com Port Setup';

Keypad: Engineers Code > Programming Menu > Com Port Setup
UDL: COMS > Com Port Setup

Program Com Port 1 or 2* as 'Density Fog/ UNIK'
*Com Port 2 can only be used on a CP-50/ CP-100 or CP-200

It can take up to 3 minutes for the Density machine to be recognised by the Orisec Control Panel.

2. Installation – W-Density (Wireless)

Utilising the 'W-Density' wireless module, allows the Density integration to be implemented via the Orisec wireless network.

The Orisec control panel must have a wireless expander connected to utilise the 'W-DENSITY'.

Supported wireless expanders are listed:

- W-AP – Version N/A
- W-XP – version 1.32, onwards
- W-XP-R – Version 2.06, onwards
- W-XPR-EXT – Version 2.06, onwards
- RK-720 – Version 1.14, onwards (requires an expander – listed above)
- RK-850- Version 1.14, onwards (requires an expander – listed above)
- RK-920- Version 1.14, onwards (requires an expander – listed above)
- RK-1050 - Version 1.14, onwards (requires an expander – listed above)
- TK-1250 Version 2.06, onwards (requires an expander – listed above)

Wireless expanders can be updated via the control panel:

Engineers Code > Tests and Diagnostics > Update Device Firmware

Keypads with wireless expanders can be updated via the 'Orisec Flash Programmer' PC application utilising a Micro USB lead.

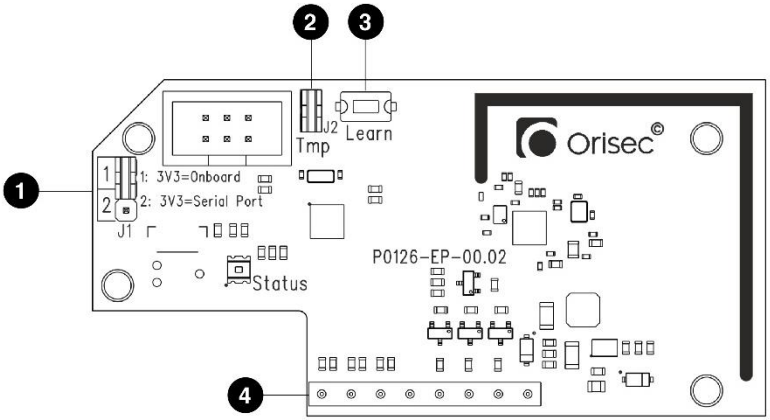

1. Mode Selection
    a. 3v3 = Serial Port – This mode of operation enables the use of the 'plug-on connector' supported by all Density machines. (Density UNIK must be mains powered to use this connector)
    b. 3v3 = Onboard – This mode of operation is only for Density UNIK only and utilise the 'PINs' (Density UNIK must be battery powered and not mains powered to utilise these pins)
2. Tamper – Optional Tamper connection for use with the Density UNIK. If active the Orisec control panel will report Zone xx tamper (Where xx denotes the zone).
3. LEARN – This button is used to learn the W-DENSITY to the Orisec Control Panel
4. UNIK PINS – These pins are only for the Density UNIK machine when battery powered only (No Mains)

Do not use DENSITY UNIK PINS on the Density UNIK machine if Mains powered. This WILL damage the W-DENSITY and the Density UNIK.

Density UNIK – "Always On" Mode (External Power Source)

Connect the 'W-DENSITY' Connection lead onto 'J4' of the Density UNIK machine as highlighted below.

Ensure J1 on the W-DENSITY is set to: '1: 3v3= Serial Port'

Ensure W3 on the Density UNIK is FITTED.

This mode of operation is only supported when the Density UNIK is mains powered.

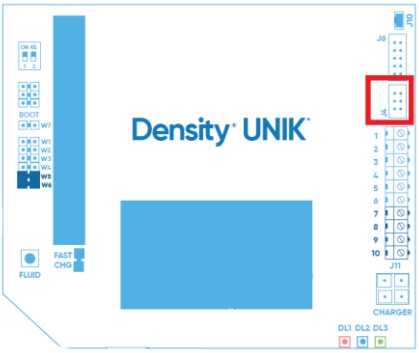

Once the 'W-DENSITY' is powered it can be learnt to the Orisec control panel:

The W-DENSITY must be learnt to a zone between 1-50 on the Orisec control panel.

- Enter Engineering Mode
- Select 'Setup Wireless Zones'
- Highlight the required zone
- Scroll down to 'ID' (Learn will be displayed on the bottom right)
- Press the 'Learn' button 1-5 times to learn in the W-DENSITY

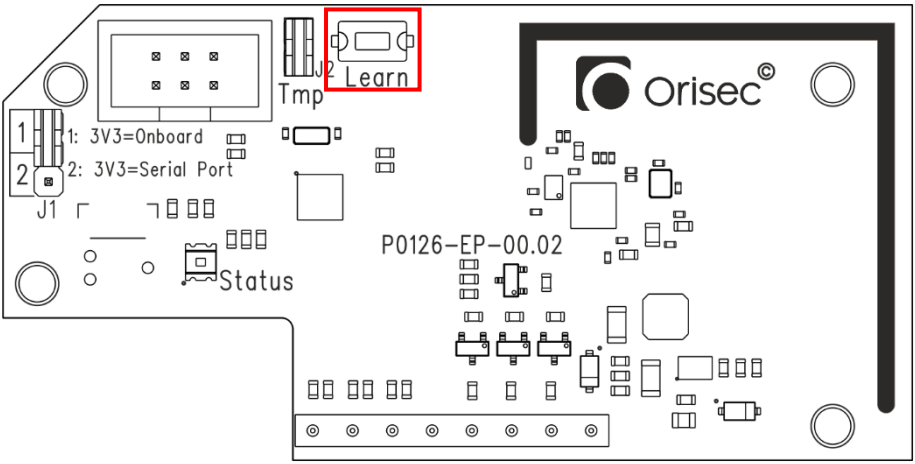

Ensure the tamper status is visible after learning by scrolling down. If the tamper status is not shown, repeat the steps above.

Density UNIK – "Low Power" Mode (Stand-alone)

Connect the 'W-DENSITY' to terminals 3-10 on the Density UNIK machine as highlighted below:

Ensure J1 on the W-DENSITY is set to: '2: 3v3= Onboard'

Ensure W3 on the Density UNIK is REMOVED.

This mode of operation is only supported when the Density UNIK is battery powered only (Not Mains)

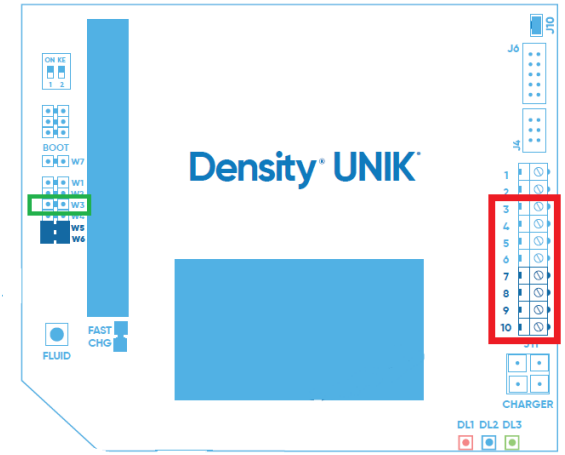

Once the 'W-DENSITY' is powered it can be learnt to the Orisec control panel:

The W-DENSITY must be learnt to a zone between 1-50 on the Orisec control panel.

- Enter Engineering Mode
- Select 'Setup Wireless Zones'
- Highlight the required zone
- Scroll down to 'ID' (Learn will be displayed on the bottom right)
- Press the 'Learn' button 1-5 times to learn in the W-DENSITY

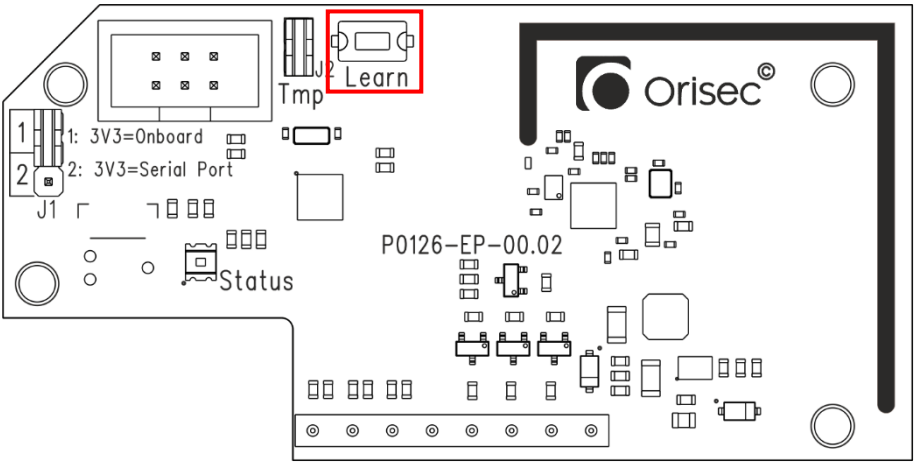

Ensure the tamper status is visible after learning by scrolling down. If the tamper status is not shown, repeat the steps above.

Density 600

Connect the 'W-DENSITY' Connection lead onto 'COM1' of the Density 600 machine as highlighted below.
Ensure J1 on the W-DENSITY is set to: '1: 3v3= Serial Port'

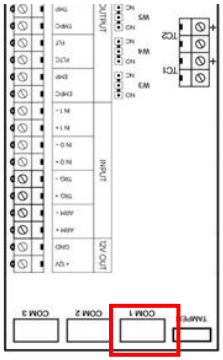

Dipswitch 6 - Default is ON, this needs to be turned OFF.

IMPORTANT: When changing position on the dipswitch, the Density unit MUST be rebooted. It is suggested to turn OFF the power, wait 20 seconds, then reapply power.

Dipswitch 8 - Service Mode - Default is ON, this needs to be turned OFF.

IMPORTANT: Changing the dipswitch position for service mode does not require a machine reboot.

Once the 'W-DENSITY' is powered it can be learnt to the Orisec control panel:
The W-DENSITY must be learnt to a zone between 1-50 on the Orisec control panel.

- Enter Engineering Mode
- Select 'Setup Wireless Zones'
- Highlight the required zone
- Scroll down to 'ID' (Learn will be displayed on the bottom right)
- Press the 'Learn' button 1-5 times to learn in the W-DENSITY

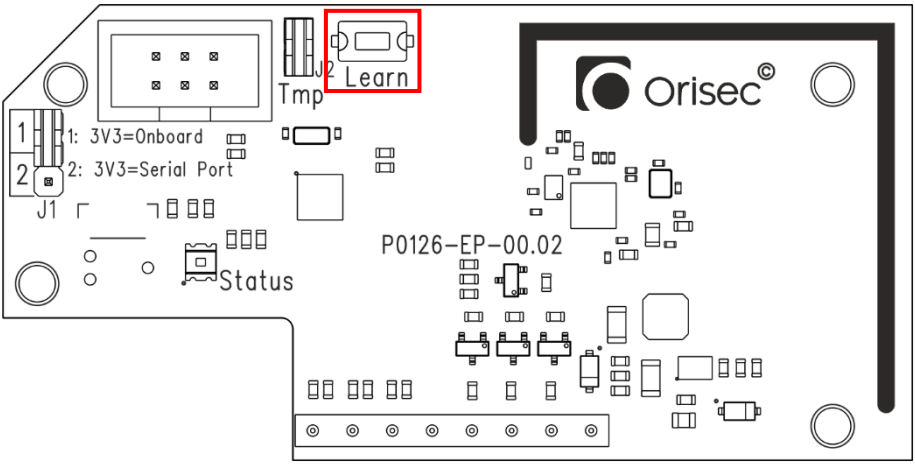

Ensure the tamper status is visible after learning by scrolling down. If the tamper status is not shown, repeat the steps above.

Density 900 / 1500 / 2400

Connect the 'W-DENSITY' Connection lead onto 'COM3' of the Density 900/ 1500/ 2400 machine as highlighted below.
Ensure J1 on the W-DENSITY is set to: '1: 3v3= Serial Port'

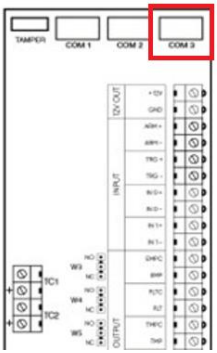

Dipswitch 6 - Default is ON, this needs to be turned OFF.

IMPORTANT: When changing position on the dipswitch, the Density unit MUST be rebooted. It is suggested to turn OFF the power, wait 20 seconds, then reapply power.

Dipswitch 8 - Service Mode - Default is ON, this needs to be turned OFF.

IMPORTANT: Changing the dipswitch position for service mode does not require a machine reboot.

Once the 'W-DENSITY' is powered it can be learnt to the Orisec control panel:

The W-DENSITY must be learnt to a zone between 1-50 on the Orisec control panel.

- Enter Engineering Mode
- Select 'Setup Wireless Zones'
- Highlight the required zone
- Scroll down to 'ID' (Learn will be displayed on the bottom right)
- Press the 'Learn' button 1-5 times to learn in the W-DENSITY

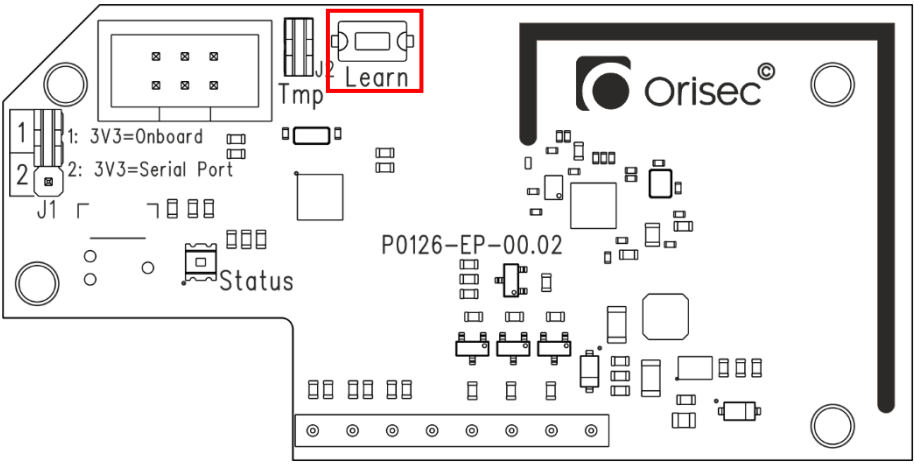

Ensure the tamper status is visible after learning by scrolling down. If the tamper status is not shown, repeat the steps above.

3. Programming

This section covers the programming required to setup the Density Fog Machine with the Orisec Control Panel. Examples will be provided throughout this guide; however, it is highly recommended to tailor the programming of timers and chains to the customer's needs and requirements and not just simply copy what is present in the guide.

It is highly recommended to utilise Orisec UDL to program the Density Fog Machine.

*Required Orisec UDL version 6.0.4.9, onwards.

Shoot Time

Shoot time (default 20 seconds) can be set to the customer's requirement from 1 second up-to 80 seconds. This timer controls the duration of the 'Shoot' during the programmed event. On the Orisec control panel navigate to 'Fog Shoot Time';

Keypad: Engineers Code > Programming Menu > System Options > System Timers
UDL: SYSTEM > Timers

IMPORTANT: Maximum shoot times differ per Density unit:

Density UNIK = 60 seconds
Density 600 = 28 seconds
Density 900 = 29 seconds
Density 1500 = 44 seconds
Density 2400 = 80 seconds

Density UNIK machines have set shoot times and cannot be manually adjusted, the shoot times are listed:
Density UNIK shoot times

- 2 Seconds
- 15 Seconds
- 30 Seconds
- 60 Seconds

If a shoot time is programmed in-between the above values, the lowest shoot time is selected automatically.

As an example, shoot time programmed as 25 seconds on the Orisec control Panel, the Density UNIK machine will trigger for 15 Seconds.

Engineer Test Timer *(Optional)*

This timer, if programmed, affects the duration of the 'Shoot' following an engineer log off. Any 'Shoot' commands made within this programmed time window will only force a 4 second 'Shoot' from the Density Fog Machine. After the timer has elapsed the 'Shoot' time will follow the programmed time. - Default 000 seconds.

To program this optional timer, navigate to the following location:

Keypad: Engineers Code > Programming Menu > System Options > Timers
UDL: SYSTEM > Timers

Density Fog Faults

At default, all faults for the Density Fog Machine will be recorded in the Orisec Control Panel's event log, signalled to an ARC (if programmed) and indicated on the control panel screen in day mode to alert an end user.

The on-screen indication can be removed so faults are 'Log Only'. To alter this select the option 'Density Fog Log Only';

Keypad: Engineers Code > Programming Menu > System Options > Monitor H/W

UDL: SYSTEM > Monitor Hardware

The faults that are recorded are listed below:

- Coms Lost (Between Control panel and Density Fog Machine)
- Lid Tamper
- Battery Fault
- Fluid Low/ Empty
- Mains off
- Main Unit fault
- Shoot failure/ issue

Density UNIK Charge Status *(Optional)*

Density UNIK machines can have their charge status monitored via the Orisec control panel. If enabled, Density UNIK machines will monitor for a 12v charger - if this is lower than 10.4v DC or removed the control panel will register a fault to indicate the charger fault.

This can be enabled on the control panel in the following location:

Keypad: Engineers Code > Programming Menu > System Options > Monitor H/W
UDL: SYSTEM > Monitor Hardware

Density Fog Arming

The Density Fog Machine cannot 'Shoot' until the unit is armed. This section explains how to program a Chain (Custom Output) on the Orisec control panel to Arm the Density Fog Machine.

Assign a Chain

First a unique Chain must be assigned to the 'Density Fog Arming' command. Navigate to 'Density Fog Arming';

Keypad: Engineers Code > Programming Menu > System Options > Chain Control O/Ps

UDL: SYSTEM > Text/ Radio > Chain Control Outputs

Assign a Chain number to the option e.g. 01

Chain Programming

This section is covered for UDL use only.

The Chain must be programmed to meet the customer's requirement.

In Orisec UDL select 'More' then 'Chains'.

A common setup is simply to arm the Density Fog Machine with the control panel, the setup is shown below:

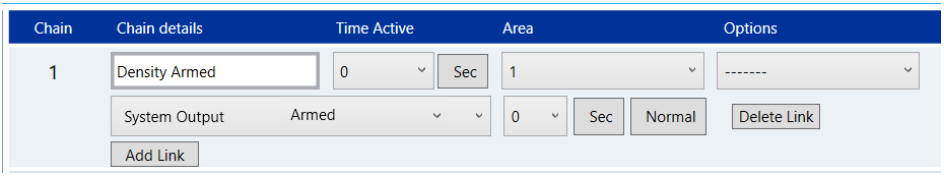

This can be further customised for any scenario. Please refer to the relevant Orisec Control Panel installation guide for additional information on programming Chains.

Density Fog Alarm

The Density Fog Machine cannot 'Shoot' until the unit is armed, this section explains how to program a Chain (Custom Output) on the Orisec control panel to Alarm (Shoot) the Density Fog Machine.

Assign a Chain

First a unique Chain must be assigned to the 'Density Fog Alarm' command. Navigate to 'Density Fog Alarm';

Keypad: Engineers Code > Programming Menu > System Options > Chain Control O/Ps

UDL: SYSTEM > Text/ Radio > Chain Control Outputs

Assign a Chain number to the option e.g. 02

Chain Programming

This section is covered for UDL use only.

The Chain must be programmed to meet the customer's requirements, in Orisec UDL select 'More' then 'Chains'.

A common setup is to only trigger (Shoot) the Density Fog Machine following a confirmed alarm condition from the Control panel. The setup is shown below:

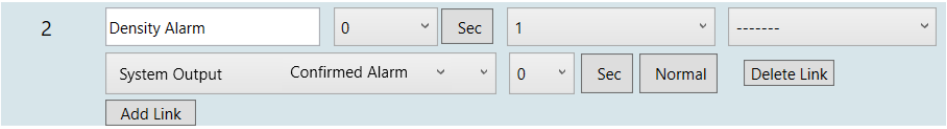

This can be further customised for any scenario. Please refer to the relevant Orisec Control Panel installation guide for additional information on programming Chains.

PA Alarms (Panic Attack)

The Density fog machines can be used in a PA (Panic) event as well as a confirmed alarm condition. The programming for '**Density Fog Arming'** and '**Density Fog Alarm**' are shown previously with a basic programming example.

To program OR logic (Confirmed alarm or PA, as an example) the Orisec Chain's will need to be programmed as shown below:

Chain Programming

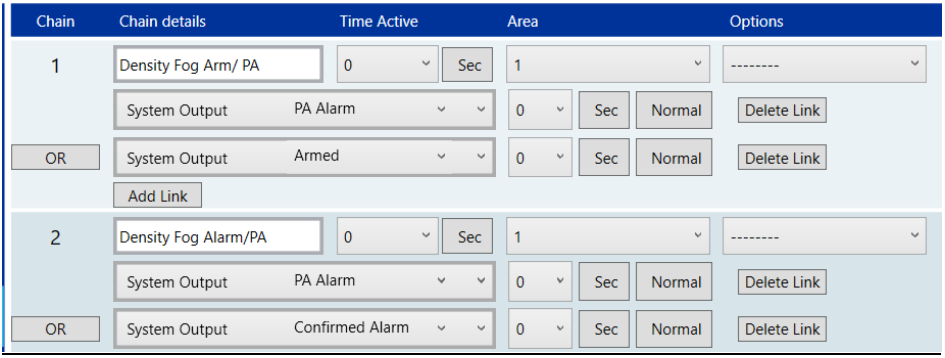

Density Fog 2nd Alarm *(Optional)*

The Density Fog Machine cannot (Shoot) until the unit is armed. This section explains how to program a Chain (Custom Output) on the Orisec control panel to Alarm 'Shoot' the Density Fog Machine for its optional '2nd Alarm'

The 2nd Alarm is set to Shoot for half of the programmed 'Shoot Time' e.g. Shoot time set as 20 seconds, 2nd shoot will only trigger for 10 seconds.

Assign a Chain

First a unique Chain must be assigned to the 'Density Fog 2nd Alarm' command. Navigate to 'Density Fog 2nd Alarm';

Keypad: Engineers Code > Programming Menu > System Options > Chain Control O/Ps

UDL: SYSTEM > Text/ Radio > Chain Control Outputs

Assign a Chain number to the option e.g. 03

Chain Programming

This section is covered for UDL use only.

The Chain must be programmed to meet the customer's requirements. In Orisec UDL select 'More' then 'Chains'.

A common setup is to only trigger (Shoot) the Density Fog Machine's 2nd Alarm following a PA condition from the Control panel. The setup is shown below:

The 'Density Fog Arming' will need to include 'PA Alarm' as an OR gate to utilise this feature.

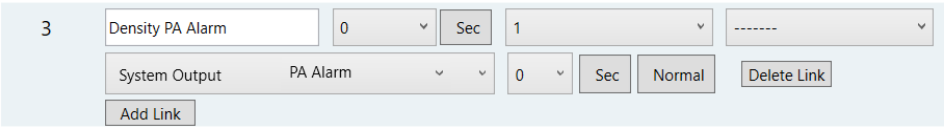

This can be further customised for any scenario. Please refer to the relevant Orisec Control Panels installation guide for additional information on programming Chains.

Density Fog PIR/PA *(Optional)* – Density UNIK Only

The Density UNIK machines can be altered via a jumper on the physical machine (W5, highlighted below) so that an 'Arm' command is not required prior to shooting.

W5 Fitted - Arm + Alarm + PIR = Shoot
W5 NOT Fitted - PA = Shoot
The 'Density Fog PIR/PA' option will Shoot for the programmed 'Shoot Time'.

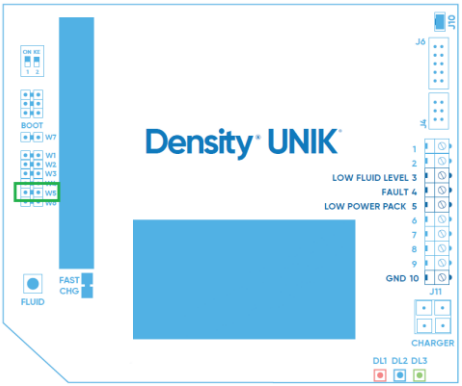

Density UNIK machines have set shoot times and cannot be manually adjusted, the shoot times are listed:

Density UNIK shoot times

- 2 Seconds

- 15 Seconds
- 30 Seconds
- 60 Seconds

If a shoot time is programmed in-between the above values, the lowest shoot time is selected automatically.

As an example, shoot time programmed as 25 seconds on the Orisec control Panel, the Density UNIK machine will trigger for 15 Seconds.

Assign a Chain

First a unique Chain must be assigned to the 'Density Fog PIR/PA' command. Navigate to 'Density Fog PIR/PA';

Keypad: Engineers Code > Programming Menu > System Options > Chain Control O/Ps
UDL: SYSTEM > Text/ Radio > Chain Control Outputs

Assign a Chain number to the option e.g. 04

Chain Programming

NOTE! This section is covered for UDL use only.
The Chain must be programmed to meet the customer's requirements. In Orisec UDL select 'More' then 'Chains'.

A common setup is to trigger (Shoot) the Density Fog Machine's following an alarm condition from the Control panel. The setup is shown below:

This can be further customised for any scenario. Please refer to the relevant Orisec Control Panels installation guide for additional information on programming Chains.

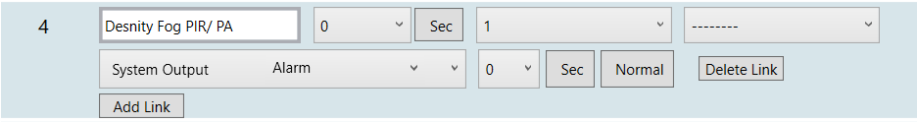

4. Testing and Diagnostics

Once the Density unit is installed and programmed the Density Fog Machine can be tested for operation in scenarios where the Chain Criteria cannot easily be tested.

This can be tested via the control panel's keypad, Controlplus 2 Application or Orisec UDL – each method is outlined below:

Control Panel

Using an Orisec Keypad, navigate to the following menu:

Engineers Code > Tests & Diagnostics > Test Density Fog.

Once in this menu the following information is visible:

- Armed Status
    - The Density Fog Machine can be manually armed within this menu, simply press the OMIT key to toggle 'Armed Status' On/Off.
- Service Shot
    - This option will trigger a 4 second shoot from the Density Fog Machine
    - Please note, The Density Fog Machine needs to be armed to action the Service Shoot
- Test Shoot 10 Seconds / 20 Seconds
    - This option will trigger either a 10 or 20 second shoot from the Density Fog Machine (Depending on what is selected)
    - Please note, The Density Fog Machine needs to be armed to action the Test Shoot.
- Reset Tank
    - This option will set the tank value back to 100% - only select this option AFTER the tank has been manually changed.
- Unit information (Displayed at the base of the screen)
    - Density Fog Machine in use e.g. Density 2400
    - Current temperature
    - Current Tank Level
    - Ready to Shoot
      (Represented by a ✓or X)



Orisec UDL

Utilising the Orisec UDL, connect to the control panel (Local with a Micro USB or remotely), download the most up to date programming (MENU > Receive All) and then select 'REAL TIME'.

In the 'Real Time' menu, from the left-hand pane, select 'Density'.

Once in this menu the following information is visible:



- Unit information (Displayed at the top of the page)
  - Density Fog Machine in use e.g. Density 2400
  - Current temperature
  - Current Tank Level
- System Status
  - GREEN = Healthy/ Ready
    - In the below example image the Tamper is Healthy and the Density Fog Machine is NOT armed.
  - ORANGE = Active/ Fault/ Not Ready
- Service Shot
  - This option will trigger a 4 second shoot from the Density Fog Machine.
  - Please note, The Density Fog Machine needs to be armed to action the Service Shoot
- Test Shoot 10 Seconds / 15 Seconds /20 Seconds
  - This option will trigger either a 10, 15 or 20 second shoot from the Density Fog Machine (Depending on what is selected)
  - Please note, The Density Fog Machine needs to be armed to action the Test Shoot.
- Reset Tank
  - This option will set the tank value back to 100% - only select this option AFTER the tank has been manually changed.
- Shoot Fog
  - This option will trigger for the programmed shoot time programmed in the control panel
  - Please note, The Density Fog Machine needs to be armed to action the Test Shoot.
- Arm Fog
  - This option allows the Density Fog Machine to be manually armed/ disarmed.

ControlPlus 2 Application



Ensure the Orisec application (ControlPlus2) has been downloaded and a site has been setup within the application, for additional information on how to setup a site simply press the 'I' button within the ControlPlus2 application, located at the top of the screen.

Depending on the user level that is logged in to ControlPlus2 depends on the options that are visible.

- Engineer –
    - Machine Information
    - System Status
    - Service Shoot
    - Test Shoots
    - Reset Tank
    - SHOOT Fog
    - Arm Machine
- Master User
    - Machine Information
    - System Status
    - Arm machine
    - SHOOT Fog
- Manager User
    - Machine Information
    - System Status
- Standard User
    - Machine Information
    - System Status

Once in this menu the following information is visible:

- Unit information (Displayed at the top of the page)
    - Density Fog Machine in use e.g. Density 2400
    - Current temperature
    - Current Tank Level
- System Status
    - GREEN = Healthy/ Ready

        - In the below example image the Tamper is Healthy and the Density Fog Machine is NOT armed.
    - ORANGE = Active/ Fault/ Not Ready
- Service Shot
    - This option will trigger a 4 second shoot from the Density Fog Machine
    - Please note, The Density Fog Machine needs to be armed to action the Service Shoot
- Test Shoot 10 Seconds / 15 Seconds /20 Seconds
    - This option will trigger either a 10, 15 or 20 second shoot from the Density Fog Machine (Depending on what is selected)
    - Please note, The Density Fog Machine needs to be armed to action the Test Shoot.
- Reset Tank
    - This option will set the tank value back to 100% - only select this option AFTER the tank has been manually changed.
- Shoot Fog
    - This option will trigger for the programmed shoot time programmed in the control panel
    - Please note, The Density Fog Machine needs to be armed to action the Test Shoot.
- Arm Fog
    - This option allows the Density Fog Machine to be manually armed/ disarmed.

UK Based Technical Support
t: +44 (0) 1706 398740
e: support@orisec.co.uk

© Orisec Ltd 2022-2023
INS175 14/11/2023